FORTIS Q SQUARE LED



Technical drawings

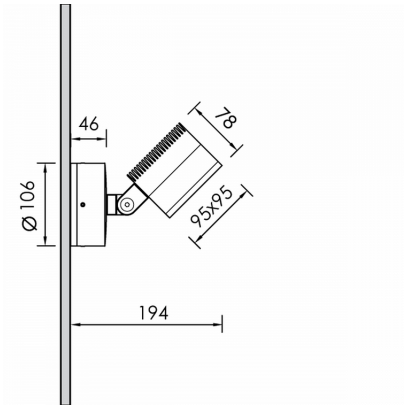

Product Details

CE LM80 LM79 TM21 REACH Source Type COB LED

General Information

Housing	Aluminium
Product code	PJ0095CL001DA
Product family	FORTIS
Diffuser	Safety Glass Clear
Control Gear	Built-in ECG
Options for Dimming Control	DALI2
Width	95 mm
Length	95 mm
Height	194 mm

Electrical data

Consumption	20,4 W
Performance	90.59 lm/W
Ripple	3
Power Factor	0.96
Nominal Voltage	230 V

Luminaire Output

Beam Type	XW
Beam	60
Luminous Flux	1848 lm
CRI CCT	940

Light distribution

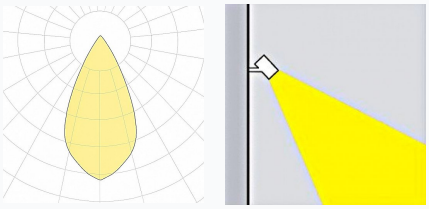

Safety characteristics

IK	06
IP	54
Protection Class	Class I

Temperature Operating Conditions

Lifetime	>60.000h L80B10@35°C
Operating Ambient Temperature	-20...+45ºC
Operating Humidity Level	5...95%