HEADOFFICE: Showroom 13 Sofokli Venizelou Ave., Likovrisi, P.O. Box 14123, Athens, Greece Tel: (+30) 210 2851 304 I www.bright.gr I info@bright.gr

NUDO OUTDOOR H.P.LED



Technical drawings

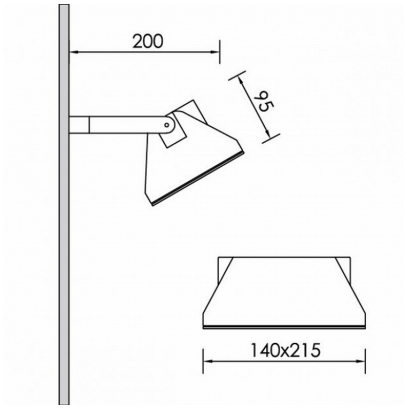

Product Details

CE LM80 LM79 TM21 REACH Source Type H.P. LED

General Information

Housing	Aluminium
Product code	PJ0122CL003ON
Product family	NUDO
Diffuser	Safety Glass Clear
Control Gear	Built-in ECG
Options for Dimming Control	On-Off
Width	140 mm
Length	215 mm
Height	95 mm

Electrical data

Consumption	40 W
Performance	105 lm/W
Ripple	3
Power Factor	0.96
Nominal Voltage	230 V

Luminaire Output

Beam Type	NM
Beam	25º
Luminous Flux	4200 lm
CRI CCT	930

Light distribution

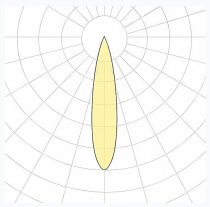

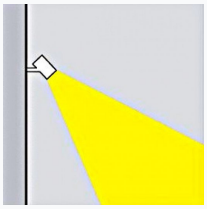

Safety characteristics

IK	07
IP	65
Protection Class	Class I

Temperature Operating Conditions

Lifetime	>50.000h L80B10@35°C
Operating Ambient Temperature	-20...+45ºC
Operating Humidity Level	5...95%