NEPA MAX OUTDOOR



Technical drawings

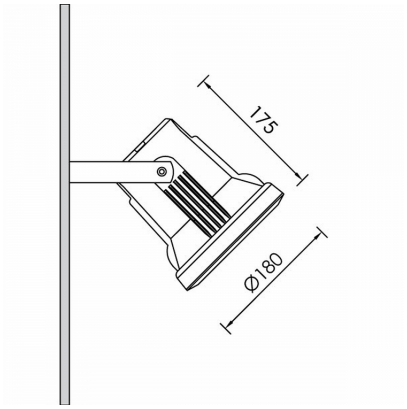

Product Details

CE LM80 LM79 TM21 REACH Source Type H.P. LED

General Information

Housing	Aluminium
Product code	PJ0154CL002ON
Product family	NEPA
Diffuser	Safety Glass Clear
Control Gear	Built-in ECG
Options for Dimming Control	On-Off
Height	175 mm
Diameter	180 mm

Electrical data

Consumption	20 W
Performance	109.75 lm/W
Ripple	3
Power Factor	0.96
Nominal Voltage	230 V

Luminaire Output

Beam Type	W
Beam	45º
Luminous Flux	2195 lm
CRI CCT	930

Light distribution

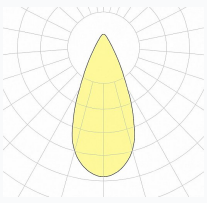

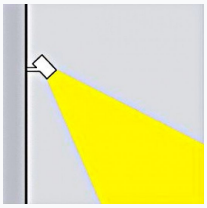

Safety characteristics

IK	07
IP	65
Protection Class	Class I

Temperature Operating Conditions

Lifetime	>50.000h L80B10@35°C
Operating Ambient Temperature	-20...+45ºC
Operating Humidity Level	5...95%