# NEPA MAX OUTDOOR



## Technical drawings

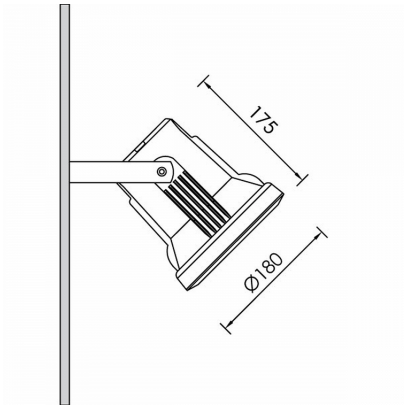


## Product Details

CE LM80 LM79 TM21 REACH Source Type H.P. LED

### General Information

| | |
|---|---|
| Housing | Aluminium |
| Product code | PJ0154CL009ON |
| Product family | NEPA |
| Diffuser | Safety Glass Clear |
| Control Gear | Built-in ECG |
| Options for Dimming Control | On-Off |
| Height | 175 mm |
| Diameter | 180 mm |

### Electrical data

| | |
|---|---|
| Consumption | 20 W |
| Performance | 109.75 lm/W |
| Ripple | 3 |
| Power Factor | 0.96 |
| Nominal Voltage | 230 V |

### Luminaire Output

| | |
|---|---|
| Beam Type | W |
| Beam | 45º |
| Luminous Flux | 2195 lm |
| CRI CCT | 930 |

### Light distribution

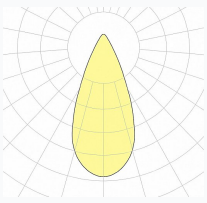

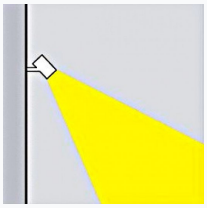

### Safety characteristics

| | |
|---|---|
| IK | 07 |
| IP | 65 |
| Protection Class | Class I |

### Temperature Operating Conditions

| | |
|---|---|
| Lifetime | >50.000h L80B10@35°C |
| Operating Ambient Temperature | -20...+45ºC |
| Operating Humidity Level | 5...95% |