NEPA MAX OUTDOOR BRASS



Technical drawings

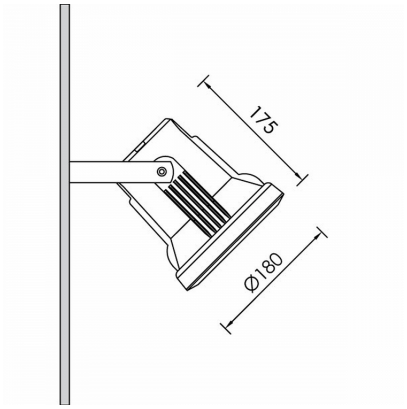

Product Details

CE LM80 LM79 TM21 REACH Source Type E27 LED Lamp

General Information

Housing	Brass
Product code	PJ0169CL002
Product family	NEPA
Diffuser	Safety Glass Clear
Control Gear	Built-in ECG
Height	175 mm
Diameter	180 mm

Electrical data

Luminaire Output

Light distribution

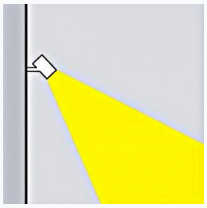

Safety characteristics

IK	07
IP	65

Temperature Operating Conditions