SATIS OUTDOOR H.P.LED



Technical drawings

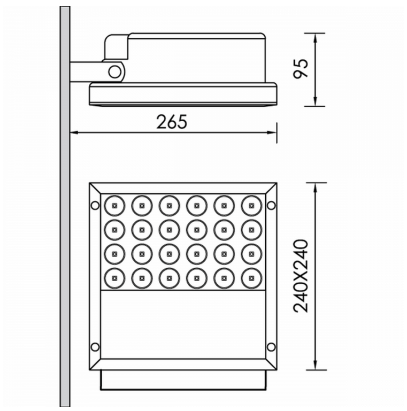

Product Details

CE LM80 LM79 TM21 REACH Source Type H.P. LED

General Information

Housing	Aluminium
Product code	PJ0177CL001ON
Product family	SATIS
Diffuser	Safety Glass Clear
Control Gear	Built-in ECG
Options for Dimming Control	On-Off
Width	240 mm
Length	240 mm
Height	95 mm

Electrical data

Consumption	26,6 W
Performance	130.34 lm/W
Ripple	3
Power Factor	0.96
Nominal Voltage	230 V

Luminaire Output

Beam Type	ASY
Luminous Flux	3467 lm
CRI CCT	940

Light distribution

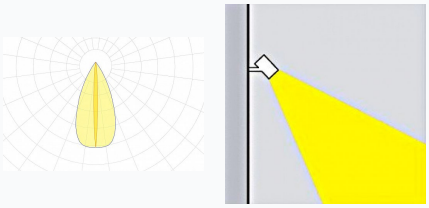

Safety characteristics

IK	05
IP	65
Protection Class	Class I

Temperature Operating Conditions

Lifetime	>60.000h L80B10@35°C
Operating Ambient Temperature	-20...+45ºC
Operating Humidity Level	5...95%