DENUS OUTDOOR BRASS H.P.LED



Technical drawings

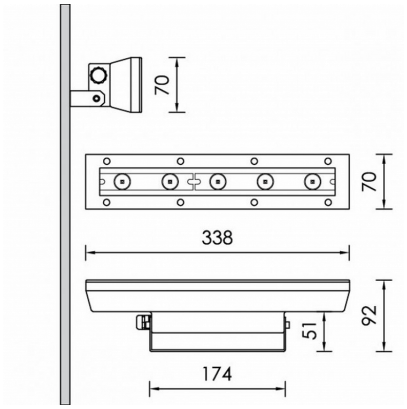

Product Details

CE LM80 LM79 TM21 REACH Source Type H.P. LED

General Information

Housing	Brass
Product code	FA0009CL003DA
Product family	DENUS
Diffuser	Safety Glass Clear
Control Gear	Built-in ECG
Options for Dimming Control	DALI2
Width	70 mm
Length	338 mm
Height	92 mm

Electrical data

Consumption	5,6 W
Performance	105.71 lm/W
Ripple	3
Power Factor	0.96
Nominal Voltage	230 V

Luminaire Output

Beam Type	NM
Beam	25º
Luminous Flux	592 lm
CRI CCT	930

Light distribution

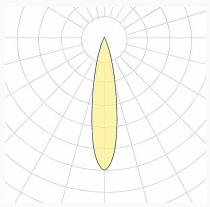

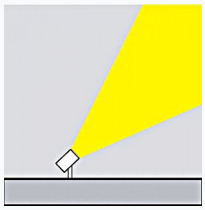

Safety characteristics

IK	05
IP	65
Protection Class	Class I

Temperature Operating Conditions

Lifetime	>60.000h L80B10@35°C
Operating Ambient Temperature	-30...+45ºC
Operating Humidity Level	5...95%