REGIO OUTDOOR H.P.LED



Technical drawings

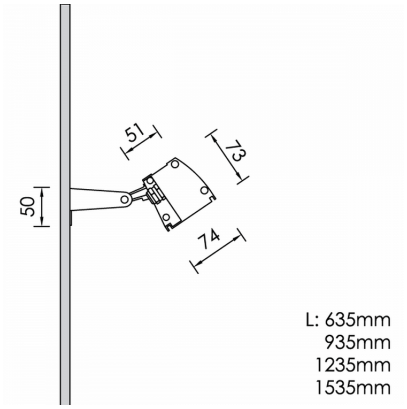

Product Details

CE LM80 LM79 TM21 REACH Source Type H.P. LED

General Information

Housing	Aluminium
Product code	FA0066CL009DA
Product family	REGIO
Diffuser	Safety Glass Clear
Control Gear	Built-in ECG
Options for Dimming Control	DALI2
Width	74 mm
Length	1235 mm
Height	73 mm

Electrical data

Consumption	30.3 W
Performance	100.36 lm/W
Ripple	3
Power Factor	0.96
Nominal Voltage	230 V

Luminaire Output

Beam Type	ASY
Luminous Flux	3041 lm
CRI CCT	927

Light distribution

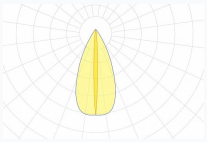

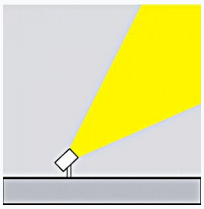

Safety characteristics

IK	05
IP	65
Protection Class	Class I

Temperature Operating Conditions

Lifetime	>50.000h L80B10@35°C
Operating Ambient Temperature	-20...+45ºC
Operating Humidity Level	5...95%