DENUS GROUND INOX H.P.LED



Technical drawings

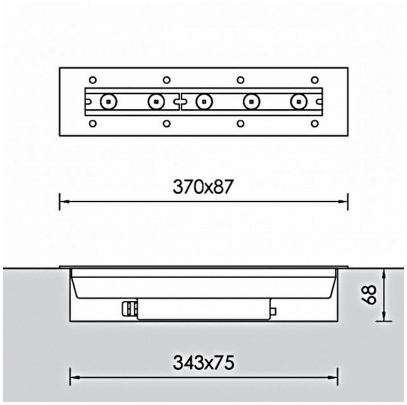

Product Details

CE LM80 LM79 TM21 REACH Source Type H.P. LED

General Information

Housing	Inox
Product code	GR0021CL007DA
Product family	DENUS
Diffuser	Safety Glass Clear
Control Gear	Built-in ECG
Options for Dimming Control	DALI2
Width	87 mm
Length	370 mm
Height	68 mm

Electrical data

Consumption	5.6 W
Performance	105.71 lm/W
Ripple	3
Power Factor	0.96
Nominal Voltage	230 V

Luminaire Output

Beam Type	W
Beam	45º
Luminous Flux	592 lm
CRI CCT	930

Light distribution

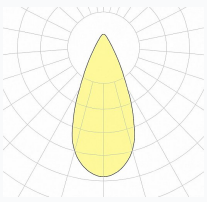

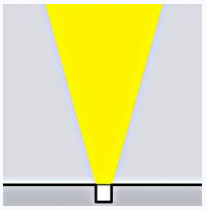

Safety characteristics

IK	05
IP	67
Protection Class	Class I

Temperature Operating Conditions

Lifetime	>60.000h L80B10@35°C
Operating Ambient Temperature	-30...+45°C
Operating Humidity Level	5...95%