REGIO GROUND H.P.LED



Technical drawings

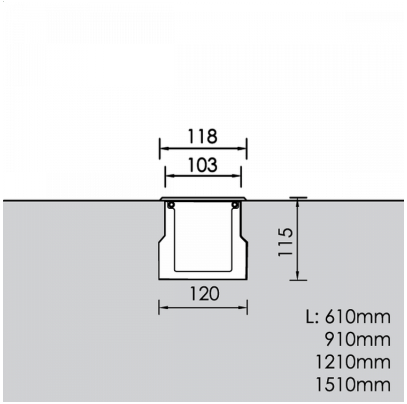

Product Details

CE LM80 LM79 TM21 REACH Source Type H.P. LED

General Information

Housing	Inox
Product code	GR0106CL007ON
Product family	REGIO
Diffuser	Safety Glass Clear
Control Gear	Built-in ECG
Options for Dimming Control	On-Off
Width	120 mm
Length	635 mm
Height	115 mm

Electrical data

Consumption	16 W
Performance	110 lm/W
Ripple	3
Power Factor	0.96
Nominal Voltage	230 V

Luminaire Output

Beam Type	NM
Beam	25º
Luminous Flux	1760 lm
CRI CCT	940

Light distribution

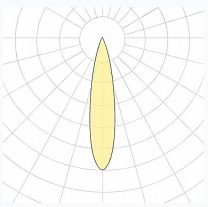

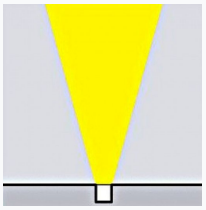

Safety characteristics

IK	05
IP	67
Protection Class	Class I

Temperature Operating Conditions

Lifetime	>50.000h L80B10@35°C
Operating Ambient Temperature	-20...+45°C
Operating Humidity Level	5...95%