CERNO 4 IP65 LED



Technical drawings

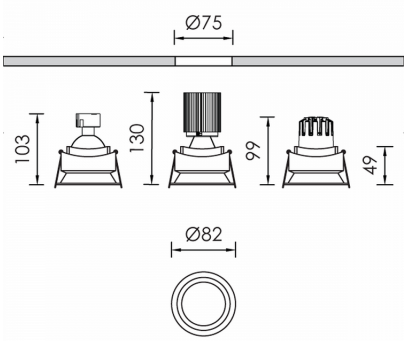

Product Details

CE LM80 LM79 TM21 REACH Source Type COB LED

General Information

Housing	Plastic
Product code	CM0557CL001ON
Product family	CERNO
Diffuser	Safety Glass Clear
Control Gear	Remote Electronic Driver
Options for Dimming Control	On-Off
Height	99 mm
Diameter	82 mm

Electrical data

Consumption	7.6 W
Performance	84.47 lm/W
Ripple	3
Power Factor	0.96
Nominal Voltage	34.6 V

Luminaire Output

Beam Type	N
Beam	17º
Luminous Flux	642 lm
CRI CCT	930

Light distribution

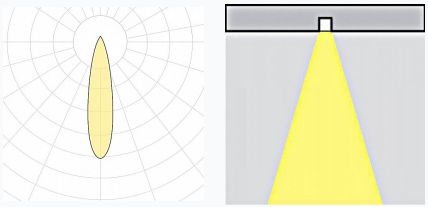

Safety characteristics

IK	05
IP	65
Protection Class	Class III

Temperature Operating Conditions

Lifetime	>60.000h L80B10@35°C
Operating Ambient Temperature	-10...+45°C
Operating Humidity Level	5...95%