HEADOFFICE: Showroom 13 Sofokli Venizelou Ave., Likovrisi, P.O. Box 14123, Athens, Greece Tel: (+30) 210 2851 304 I www.bright.gr I info@bright.gr

NOXA 2 OUT



Technical drawings

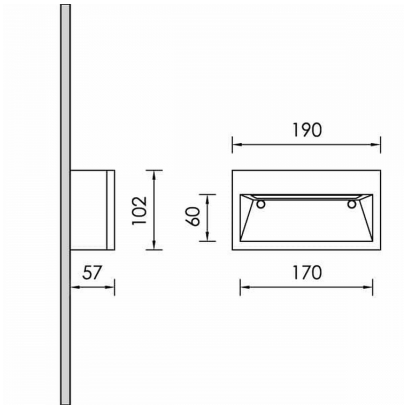

Product Details

CE LM80 LM79 TM21 REACH Source Type H.P. LED

General Information

Housing	Aluminium
Product code	WF0020CL003DAC
Product family	NOXA
Diffuser	Opal Polycarbonate
Options for Dimming Control	DALI2
Options for Wireless Dimming	Casambi
Width	102 mm
Length	102 mm
Height	55 mm

Electrical data

Consumption	4.8 W
Performance	81.25 lm/W
Ripple	3
Power Factor	0.96
Nominal Voltage	230 V

Luminaire Output

Beam Type	ASY
Luminous Flux	390 lm
CRI CCT	940

Light distribution

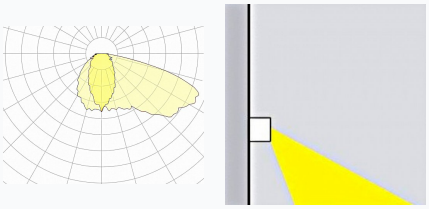

Safety characteristics

IK	08
IP	65
Protection Class	Class I

Temperature Operating Conditions

Lifetime	>50.000h L80B10@35°C
Operating Ambient Temperature	-20...+45°C
Operating Humidity Level	5...95%