PORTO 1 B BRASS DIGITUS



Technical drawings

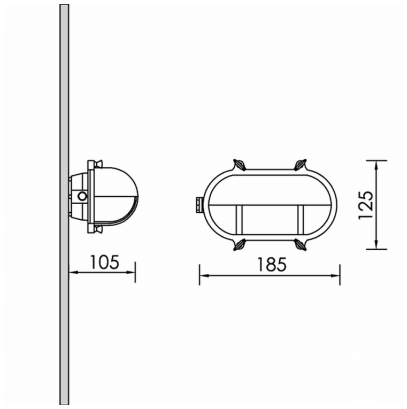

Product Details

CE LM80 LM79 TM21 REACH Source Type E27 LED Lamp

General Information

Housing	Brass
Product code	WF0110CL003
Product family	PORTO
Diffuser	Safety Glass Sandblast
Width	125 mm
Length	185 mm
Height	105 mm

Electrical data

Luminaire Output

Light distribution

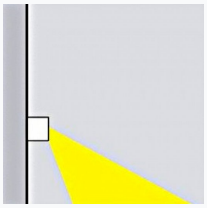

Safety characteristics

IK	08
IP	65

Temperature Operating Conditions