# NOXA



## Technical drawings

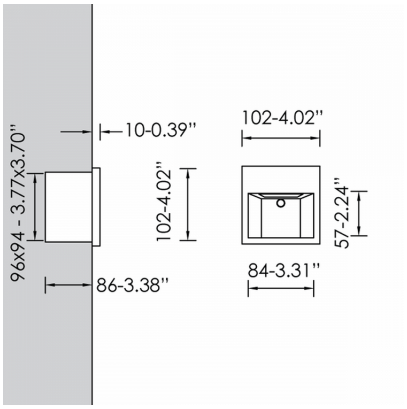


## Product Details

CE LM80 LM79 TM21 REACH Source Type COB LED

### General Information

| | |
|---|---|
| Housing | Aluminium |
| Product code | WF0211CL009DA |
| Product family | NOXA |
| Diffuser | Opal Polycarbonate |
| Options for Dimming Control | DALI2 |
| Width | 102 mm |
| Length | 102 mm |
| Height | 82 mm |

### Electrical data

| | |
|---|---|
| Consumption | 1.6 W |
| Performance | 81.25 lm/W |
| Ripple | 3 |
| Power Factor | 0.96 |

### Luminaire Output

| | |
|---|---|
| Beam Type | ASY |
| Luminous Flux | 130 lm |
| CRI CCT | 940 |

### Light distribution

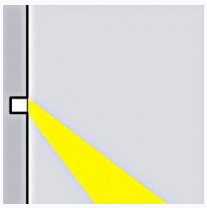

### Safety characteristics

| | |
|---|---|
| IK | 08 |
| IP | 65 |
| Protection Class | Class I |

### Temperature Operating Conditions

| | |
|---|---|
| Lifetime | >50.000h L80B10@35°C |
| Operating Ambient Temperature | -20...+45°C |
| Operating Humidity Level | 5...95% |