NOXA



Technical drawings

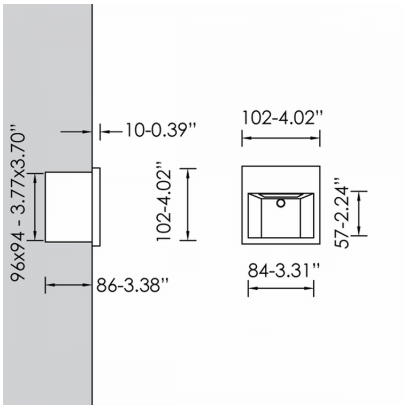

Product Details

CE LM80 LM79 TM21 REACH Source Type COB LED

General Information

Housing	Aluminium
Product code	WF0215CL009DA
Product family	NOXA
Diffuser	Opal Polycarbonate
Options for Dimming Control	DALI2
Width	102 mm
Length	102 mm
Height	82 mm

Electrical data

Consumption	3.2 W
Performance	75.63 lm/W
Ripple	3
Power Factor	0.96

Luminaire Output

Beam Type	ASY
Luminous Flux	242 lm
CRI CCT	930

Light distribution

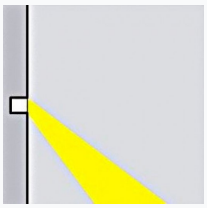

Safety characteristics

IK	08
IP	65
Protection Class	Class I

Temperature Operating Conditions

Lifetime	>50.000h L80B10@35°C
Operating Ambient Temperature	-20...+45°C
Operating Humidity Level	5...95%