MACTO 1



Technical drawings

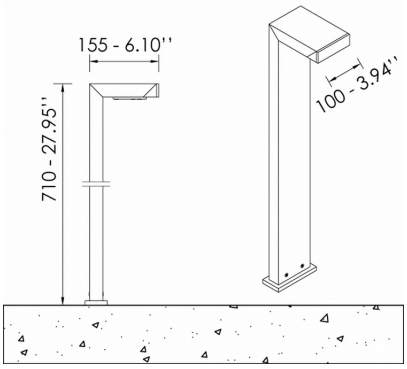

Product Details

CE LM80 LM79 TM21 REACH Source Type COB LED

General Information

Housing	Aluminium
Product code	BO0002CL009DAC
Product family	MACTO
Control Gear	Built-in ECG
Options for Dimming Control	DALI2
Options for Wireless Dimming	Casambi
Width	100 mm
Length	160 mm
Height	710 mm

Electrical data

Consumption	6.2 W
Performance	44.03 lm/W
Ripple	3
Power Factor	0.96
Nominal Voltage	230 V

Luminaire Output

Beam Type	ASY
Luminous Flux	273 lm
CRI CCT	930

Light distribution

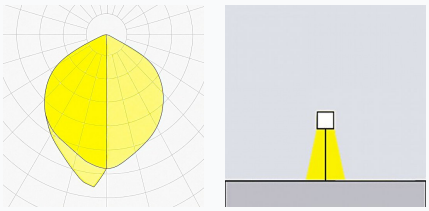

Safety characteristics

IK	04
IP	54
Protection Class	Class I

Temperature Operating Conditions

Lifetime	>50.000h L80B10@35°C
Operating Ambient Temperature	-20...+45°C
Operating Humidity Level	5...95%