TALIS 1 BRASS



Technical drawings

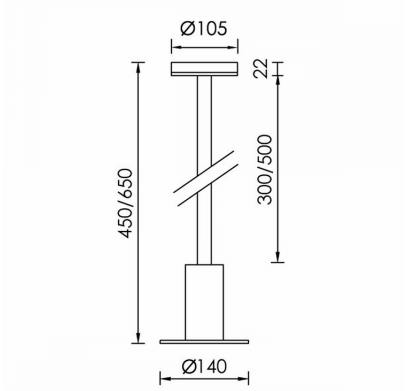

Product Details

CE LM80 LM79 TM21 REACH Source Type H.P. LED

General Information

Housing	Brass
Product code	BO0032CL001ON
Product family	TALIS
Diffuser	Opal Polycarbonate
Control Gear	Remote Electronic Driver
Options for Dimming Control	On-Off
Height	650 mm
Diameter	140 mm

Electrical data

Consumption	8.2 W
Performance	58.17 lm/W
Ripple	3
Power Factor	0.96
Nominal Voltage	230 V

Luminaire Output

Beam Type	VW
Beam	117º
Luminous Flux	477 lm
CRI CCT	940

Light distribution

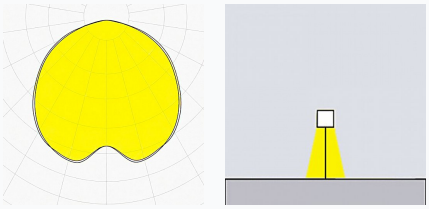

Safety characteristics

IK	05
IP	65
Protection Class	Class I

Temperature Operating Conditions

Lifetime	>50.000h L80B10@35°C
Operating Ambient Temperature	-20...+45°C
Operating Humidity Level	5...95%