TALIS 2



Technical drawings

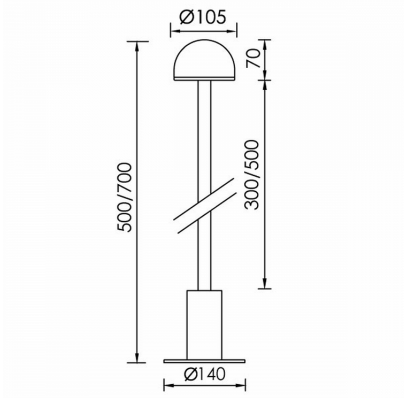

Product Details

CE LM80 LM79 TM21 REACH Source Type H.P. LED

General Information

Housing	Brass
Product code	BO0036CL109ON
Product family	TALIS
Diffuser	Plastic
Control Gear	Remote Electronic Driver
Options for Dimming Control	On-Off
Height	700 mm
Diameter	140 mm

Electrical data

Consumption	8.2 W
Performance	54.02 lm/W
Ripple	3
Power Factor	0.96
Nominal Voltage	230 V

Luminaire Output

Beam Type	VW
Beam	117º
Luminous Flux	443 lm
CRI CCT	930

Light distribution

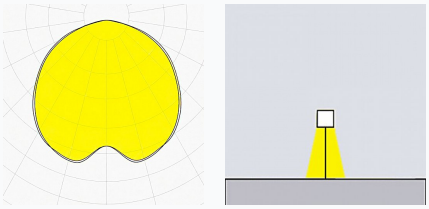

Safety characteristics

IK	05
IP	65
Protection Class	Class I

Temperature Operating Conditions

Lifetime	>50.000h L80B10@35°C
Operating Ambient Temperature	-20...+45°C
Operating Humidity Level	5...95%