HEADOFFICE: Showroom 13 Sofokli Venizelou Ave., Likovrisi, P.O. Box 14123, Athens, Greece Tel: (+30) 210 2851 304 I www.bright.gr I info@bright.gr

# ROTONDA A



## Technical drawings

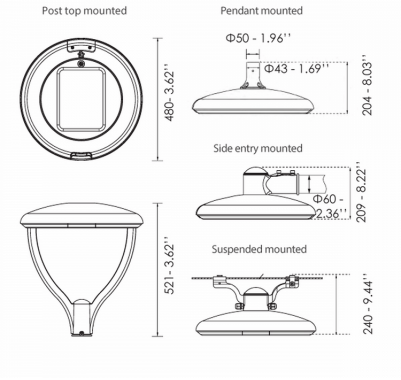


## Product Details

CE LM80 LM79 TM21 REACH Source Type H.P. LED

### General Information

| | |
|---|---|
| Housing | Aluminium |
| Product code | AM0059CL003ON |
| Product family | ROTONDA |
| Diffuser | Lens |
| Control Gear | Built-in ECG |
| Options for Dimming Control | On-Off |
| Height | 521 mm |
| Diameter | 480 mm |

### Electrical data

| | |
|---|---|
| Consumption | 90 W |
| Performance | 115 lm/W |
| Ripple | 3 |
| Power Factor | 0.96 |
| Nominal Voltage | 3 V |

### Luminaire Output

| | |
|---|---|
| Beam Type | IV |
| Beam | 54º |
| Luminous Flux | 10350 lm |
| CRI CCT | 730 |

### Light distribution

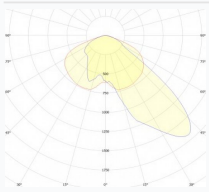

### Safety characteristics

| | |
|---|---|
| IK | 08 |
| IP | 66 |
| Protection Class | Class II |

### Temperature Operating Conditions

| | |
|---|---|
| Lifetime | >100.000h L70B10@25°C |
| Operating Ambient Temperature | -30...+45°C |
| Operating Humidity Level | 5...95% |