ROTONDA B



Technical drawings

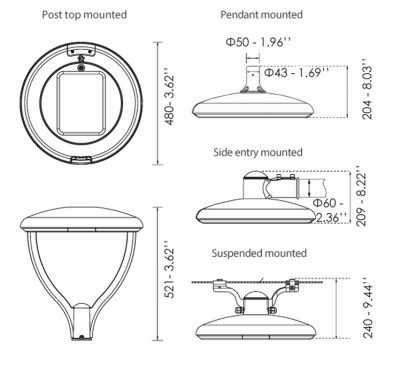

Product Details

CE LM80 LM79 TM21 REACH Source Type H.P. LED

General Information

Housing	Aluminium
Product code	AM0128CL003DA
Product family	ROTONDA
Diffuser	Lens
Control Gear	Built-in ECG
Options for Dimming Control	DALI2
Height	204 mm
Diameter	480 mm

Electrical data

Consumption	37 W
Performance	130 lm/W
Ripple	3
Power Factor	0.96
Nominal Voltage	3 V

Luminaire Output

Beam Type	IV
Beam	54º
Luminous Flux	4810 lm
CRI CCT	740

Light distribution

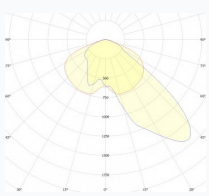

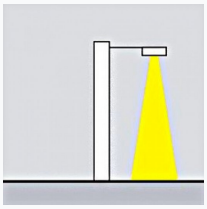

Safety characteristics

IK	08
IP	66
Protection Class	Class II

Temperature Operating Conditions

Lifetime	>100.000h L70B10@25°C
Operating Ambient Temperature	-30...+45°C
Operating Humidity Level	5...95%