HEADOFFICE: Showroom 13 Sofokli Venizelou Ave., Likovrisi, P.O. Box 14123, Athens, Greece Tel: (+30) 210 2851 304 I www.bright.gr I info@bright.gr

ROTONDA B



Technical drawings

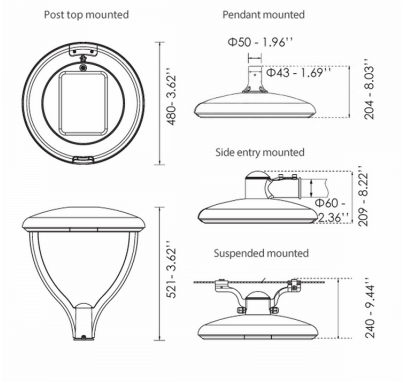

Product Details

CE LM80 LM79 TM21 REACH Source Type H.P. LED

General Information

Housing	Aluminium
Product code	AM0141CL003ON
Product family	ROTONDA
Diffuser	Lens
Control Gear	Built-in ECG
Options for Dimming Control	On-Off
Height	204 mm
Diameter	480 mm

Electrical data

Consumption	56 W
Performance	145 lm/W
Ripple	3
Power Factor	0.96
Nominal Voltage	3 V

Luminaire Output

Beam Type	V
Beam	120º
Luminous Flux	8120 lm
CRI CCT	740

Light distribution

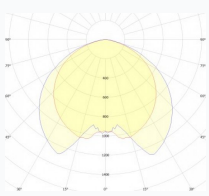

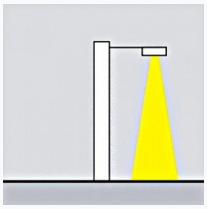

Safety characteristics

IK	08
IP	66
Protection Class	Class II

Temperature Operating Conditions

Lifetime	>100.000h L70B10@25°C
Operating Ambient Temperature	-30...+45°C
Operating Humidity Level	5...95%