# VILLA



## Technical drawings

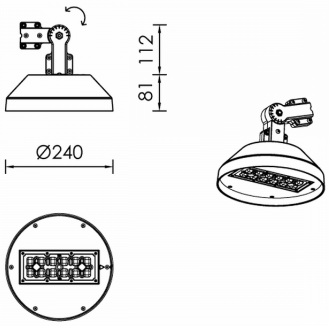


## Product Details

CE LM80 LM79 TM21 REACH Source Type H.P. LED

### General Information

| | |
|---|---|
| Housing | Aluminium |
| Product code | AM0307CL001ON |
| Product family | VILLA |
| Diffuser | PMMA |
| Control Gear | Built-in ECG |
| Options for Dimming Control | On-Off |
| Height | 81 mm |
| Diameter | 240 mm |

### Electrical data

| | |
|---|---|
| Consumption | 19 W |
| Performance | 133.68 lm/W |
| Ripple | 3 |
| Power Factor | 0.96 |
| Nominal Voltage | 3 V |

### Luminaire Output

| | |
|---|---|
| Beam Type | III |
| Luminous Flux | 2540 lm |
| CRI CCT | 730 |

### Light distribution

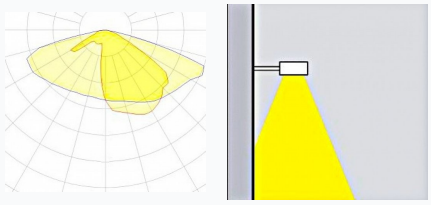

### Safety characteristics

| | |
|---|---|
| IK | 05 |
| IP | 66 |
| Protection Class | Class II |

### Temperature Operating Conditions

| | |
|---|---|
| Lifetime | >100.000h L70B10@25°C |
| Operating Ambient Temperature | -30...+45°C |
| Operating Humidity Level | 5...95% |