VILLA



Technical drawings

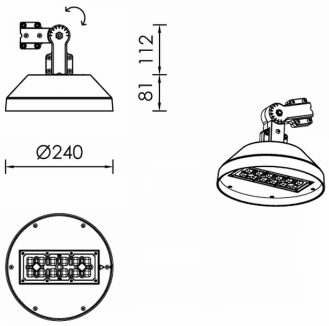

Product Details

CE LM80 LM79 TM21 REACH Source Type H.P. LED

General Information

Housing	Aluminium
Product code	AM0350CL001DAC
Product family	VILLA
Diffuser	PMMA
Control Gear	Built-in ECG
Options for Dimming Control	DALI2
Options for Wireless Dimming	Casambi
Height	81 mm
Diameter	240 mm

Electrical data

Consumption	23 W
Performance	136.96 lm/W
Ripple	3
Power Factor	0.96
Nominal Voltage	220–240 V

Luminaire Output

Beam Type	V
Luminous Flux	3150 lm
CRI CCT	740

Light distribution

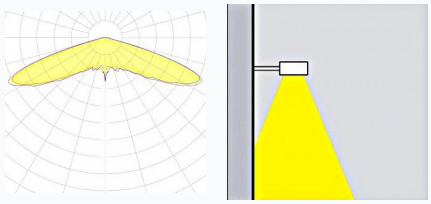

Safety characteristics

IK	05
IP	66
Protection Class	Class II

Temperature Operating Conditions

Lifetime	>100.000h L70B10@25°C
Operating Ambient Temperature	-30...+45°C
Operating Humidity Level	5...95%