HEADOFFICE: Showroom 13 Sofokli Venizelou Ave., Likovrisi, P.O. Box 14123, Athens, Greece Tel: (+30) 210 2851 304 I www.bright.gr I info@bright.gr

# TERES M FORTIS



## Technical drawings

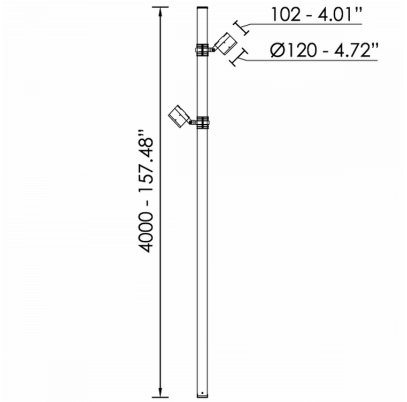


## Product Details

CE LM80 LM79 TM21 REACH Source Type COB LED

### General Information

| | |
|---|---|
| Housing | Aluminium |
| Product code | AM0357CL009ON |
| Product family | TERES |
| Diffuser | Safety Glass Clear |
| Control Gear | Built-in ECG |
| Options for Dimming Control | On-Off |
| Height | 102 mm |
| Diameter | 120 mm |

### Electrical data

| | |
|---|---|
| Consumption | 11.8 W |
| Performance | 91.44 lm/W |
| Ripple | 3 |
| Power Factor | 0.96 |
| Nominal Voltage | 3 V |

### Luminaire Output

| | |
|---|---|
| Beam Type | N |
| Beam | 15º |
| Luminous Flux | 1079 lm |
| CRI CCT | 930 |

### Light distribution

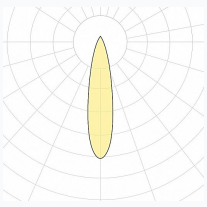



### Safety characteristics

| | |
|---|---|
| IK | 06 |
| IP | 65 |
| Protection Class | Class II |

### Temperature Operating Conditions

| | |
|---|---|
| Lifetime | >60.000h L80B10@35°C |
| Operating Ambient Temperature | -20...+45°C |
| Operating Humidity Level | 5...95% |