HEADOFFICE: Showroom 13 Sofokli Venizelou Ave., Likovrisi, P.O. Box 14123, Athens, Greece Tel: (+30) 210 2851 304 I www.bright.gr I info@bright.gr

TERES M FORTIS



Technical drawings

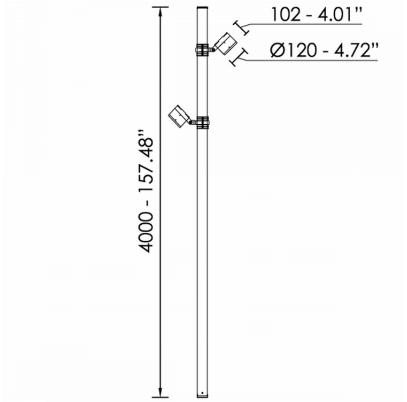

Product Details

CE LM80 LM79 TM21 REACH Source Type COB LED

General Information

Housing	Aluminium
Product code	AM0363CL002ON
Product family	TERES
Diffuser	Safety Glass Clear
Control Gear	Built-in ECG
Options for Dimming Control	On-Off
Height	102 mm
Diameter	120 mm

Electrical data

Consumption	11.8 W
Performance	96.95 lm/W
Ripple	3
Power Factor	0.96
Nominal Voltage	3 V

Luminaire Output

Beam Type	N
Beam	15º
Luminous Flux	1144 lm
CRI CCT	940

Light distribution

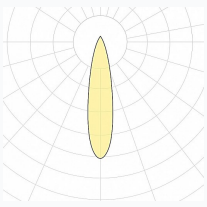



Safety characteristics

IK	06
IP	65
Protection Class	Class II

Temperature Operating Conditions

Lifetime	>60.000h L80B10@35°C
Operating Ambient Temperature	-20...+45°C
Operating Humidity Level	5...95%