# ARBOR FOCUS



## Technical drawings

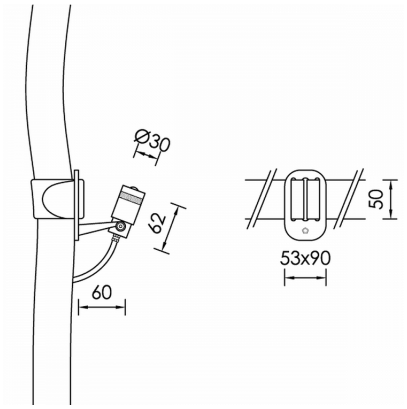


## Product Details

CE LM80 Source Type H.P. LED

### General Information

| | |
|---|---|
| Housing | Brass, Rubber |
| Product code | PJ0228CL109ON |
| Product family | ARBOR |
| Diffuser | Glass Lens |
| Control Gear | Remote Electronic Driver |
| Options for Dimming Control | On-Off |

### Electrical data

| | |
|---|---|
| Consumption | 1.62 W |
| Performance | 106.17 lm/W |
| Ripple | 3 |
| Power Factor | 0.96 |

### Luminaire Output

| | |
|---|---|
| Beam Type | W |
| Beam | 45º |
| Luminous Flux | 172 lm |
| CRI CCT | 830 |

### Light distribution

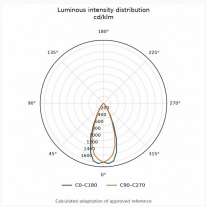


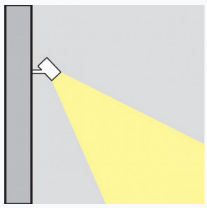

### Safety characteristics

| | |
|---|---|
| IK | 07 |
| IP | 67 |
| Protection Class | Class III |

### Temperature Operating Conditions

| | |
|---|---|
| Lifetime | >50.000h L80B10 |