CONCRETE CONTO 2M



Technical drawings

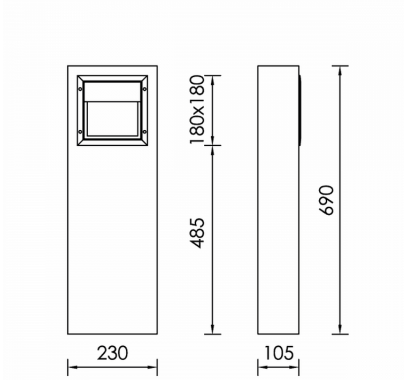

Product Details

CE LM80 LM79 TM21 REACH Source Type H.P. LED

General Information

Housing	Concrete
Product code	BO0134CL003
Product family	CONCRETE
Diffuser	Safety Glass Sandblast
Width	105 mm
Length	230 mm
Height	690 mm

Electrical data

Consumption	6.25 W
Performance	53.12 lm/W
Ripple	3
Power Factor	0.96
Nominal Voltage	230 V

Luminaire Output

Luminous Flux	332 lm
CRI CCT	930

Light distribution

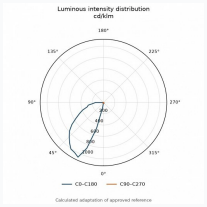

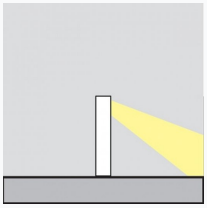

Safety characteristics

IK	07
IP	65

Temperature Operating Conditions

Lifetime	>50.000h L80B10