FAMA



Technical drawings

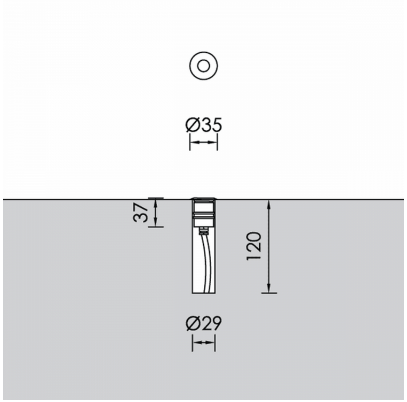

Product Details

CE LM80 Source Type H.P. LED

General Information

Housing	Inox
Product code	GR0152CL109ON
Product family	FAMA
Diffuser	Safety Glass Clear
Control Gear	Remote Electronic Driver
Options for Dimming Control	On-Off
Height	37 mm
Diameter	35 mm

Electrical data

Consumption	1.62 W
Performance	101.23 lm/W
Ripple	3
Power Factor	0.96

Luminaire Output

Beam Type	UN
Beam	8º
Luminous Flux	164 lm
CRI CCT	930

Light distribution

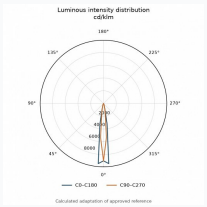

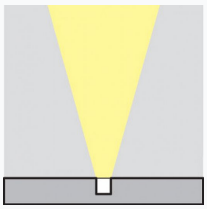

Safety characteristics

IK	07
IP	67

Temperature Operating Conditions

Lifetime	>50.000h L80B10