# FAMA L OUT DZ LED



## Technical drawings

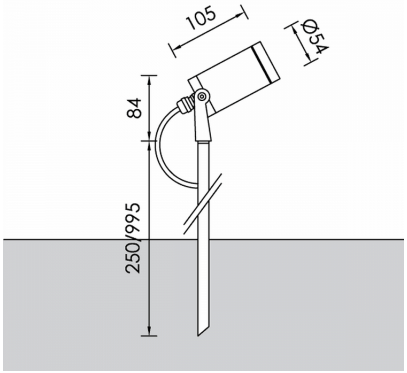


## Product Details

LM80

Source Type H.P. LED

### General Information

| | |
|---|---|
| Housing | Inox |
| Product code | BO0161CL002ON |
| Product family | FAMA |
| Diffuser | Safety Glass Clear |
| Options for Dimming Control | On-Off |
| Height | 105 mm |
| Diameter | 54 mm |

### Electrical data

| | |
|---|---|
| Consumption | 3.36 W |
| Performance | 116.37 lm/W |
| Ripple | 3 |
| Power Factor | 0.96 |

### Luminaire Output

| | |
|---|---|
| Beam Type | M |
| Beam | 25º |
| Luminous Flux | 391 lm |
| CRI CCT | 940 |

### Light distribution

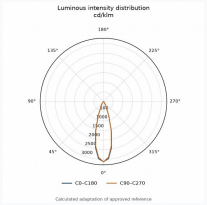


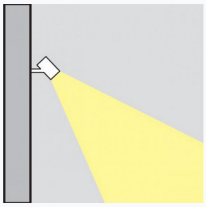

### Safety characteristics

| | |
|---|---|
| IK | 03 |
| IP | 64 |

### Temperature Operating Conditions

| | |
|---|---|
| Lifetime | >50.000h L80B10 PAR16 / GU10 / 230V |