# FAMA OUT FOCUS DZ



## Technical drawings

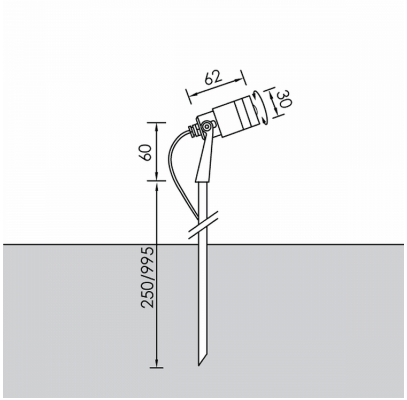


## Product Details

CE LM80 Source Type H.P. LED

### General Information

| | |
|---|---|
| Housing | Inox |
| Product code | BO0175CL109DAC |
| Product family | FAMA |
| Control Gear | Remote Electronic Driver |
| Options for Dimming Control | DALI2 |
| Options for Wireless Dimming | Casambi |

### Electrical data

| | |
|---|---|
| Consumption | 1.12 W |
| Performance | 105.36 lm/W |
| Ripple | 3 |
| Power Factor | 0.96 |

### Luminaire Output

| | |
|---|---|
| Beam Type | UN |
| Beam | 8º |
| Luminous Flux | 118 lm |
| CRI CCT | 930 |

### Light distribution

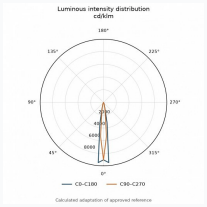


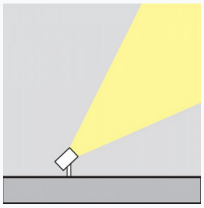

### Safety characteristics

| | |
|---|---|
| IK | 07 |
| IP | 67 |
| Protection Class | Class III |

### Temperature Operating Conditions

| | |
|---|---|
| Lifetime | >50.000h L80B10 |