FAMA OUT SPOT DZ



Technical drawings

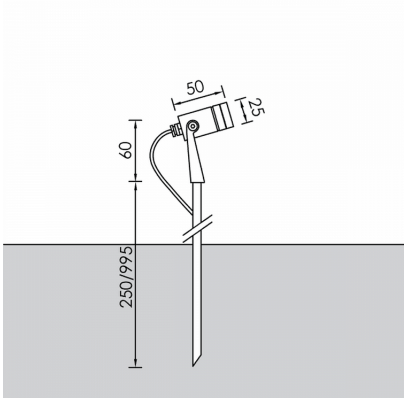

Product Details

CE LM80 Source Type H.P. LED

General Information

Housing	Brass
Product code	BO0191CL109ON
Product family	FAMA
Diffuser	Glass Lens
Control Gear	Remote Electronic Driver
Options for Dimming Control	On-Off

Electrical data

Consumption	1.12 W
Performance	100.89 lm/W
Ripple	3
Power Factor	0.96

Luminaire Output

Beam Type	M
Beam	25º
Luminous Flux	113 lm
CRI CCT	927

Light distribution

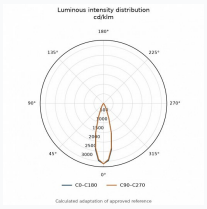

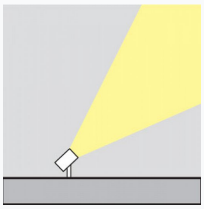

Safety characteristics

IK	07
IP	67
Protection Class	Class III

Temperature Operating Conditions

Lifetime	>50.000h L80B10