FAMA OUT SPOT DZ



Technical drawings

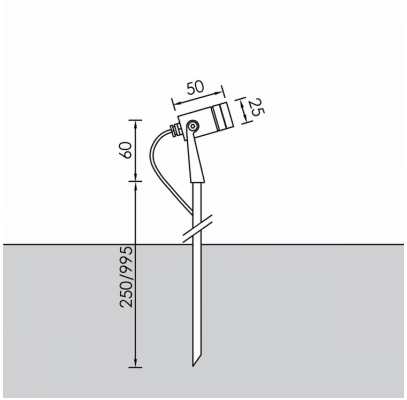

Product Details

CE LM80 Source Type H.P. LED

General Information

Housing	Brass
Product code	BO0204CL001ON
Product family	FAMA
Control Gear	Remote Electronic Driver
Options for Dimming Control	On-Off

Electrical data

Consumption	1.62 W
Performance	101.23 lm/W
Ripple	3
Power Factor	0.96

Luminaire Output

Beam Type	W
Beam	45º
Luminous Flux	164 lm
CRI CCT	930

Light distribution

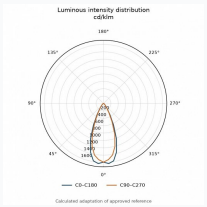

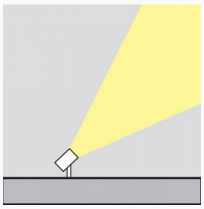

Safety characteristics

IK	07
IP	67
Protection Class	Class III

Temperature Operating Conditions

Lifetime	>50.000h L80B10