FAMA OUT SPOT DZ



Technical drawings

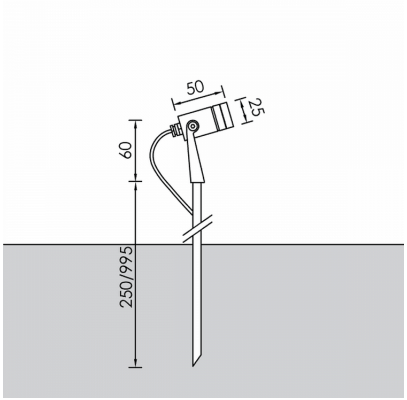

Product Details

CE LM80 Source Type H.P. LED

General Information

Housing	Brass
Product code	BO0205CL003DA
Product family	FAMA
Control Gear	Remote Electronic Driver
Options for Dimming Control	DALI2

Electrical data

Consumption	1.62 W
Performance	108.64 lm/W
Ripple	3
Power Factor	0.96

Luminaire Output

Beam Type	UN
Beam	8º
Luminous Flux	176 lm
CRI CCT	940

Light distribution

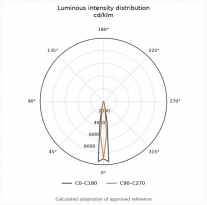

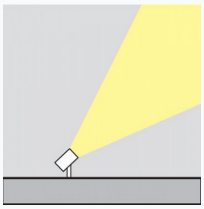

Safety characteristics

IK	07
IP	67
Protection Class	Class III

Temperature Operating Conditions

Lifetime	>50.000h L80B10