FAMA S



Technical drawings

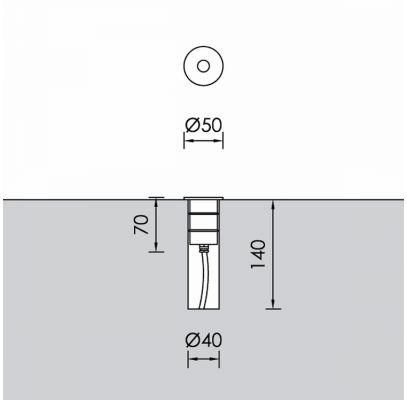

Product Details

CE LM80 Source Type H.P. LED

General Information

Housing	Brass
Product code	GR0178CL003DA
Product family	FAMA
Diffuser	Safety Glass Clear
Control Gear	Remote Electronic Driver
Options for Dimming Control	DALI2
Height	70 mm
Diameter	50 mm

Electrical data

Consumption	1.12 W
Performance	105.36 lm/W
Ripple	3
Power Factor	0.96

Luminaire Output

Beam Type	UN
Beam	8º
Luminous Flux	118 lm
CRI CCT	930

Light distribution

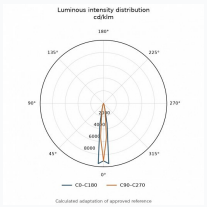

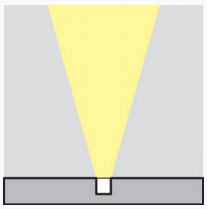

Safety characteristics

IK	05
IP	67

Temperature Operating Conditions

Lifetime	>50.000h L80B10