FAMA S



Technical drawings

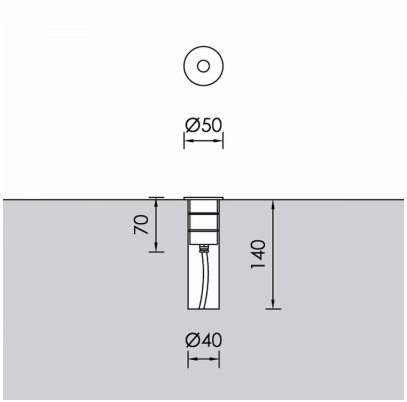

Product Details

CE LM80 Source Type H.P. LED

General Information

Housing	Inox
Product code	GR0181CL001DA
Product family	FAMA
Diffuser	Clear PMMA
Control Gear	Remote Electronic Driver
Options for Dimming Control	DALI2
Height	70 mm
Diameter	50 mm

Electrical data

Consumption	1.12 W
Performance	116.07 lm/W
Ripple	3
Power Factor	0.96

Luminaire Output

Beam Type	M
Beam	25º
Luminous Flux	130 lm
CRI CCT	940

Light distribution

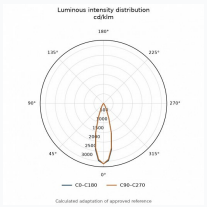

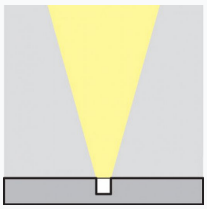

Safety characteristics

IK	05
IP	67

Temperature Operating Conditions

Lifetime	>50.000h L80B10