FAMA S PINHOLE



Technical drawings

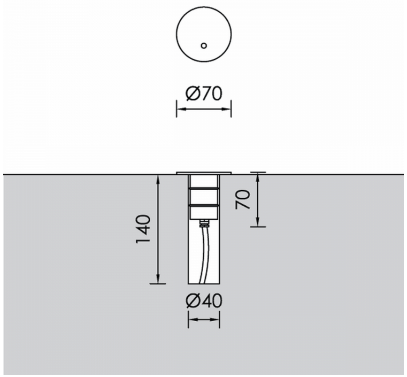

Product Details

CE LM80 Source Type H.P. LED

General Information

Housing	Inox
Product code	GR0188CL003DA
Product family	FAMA
Diffuser	Clear PMMA
Control Gear	Remote Electronic Driver
Options for Dimming Control	DALI2
Height	70 mm
Diameter	70 mm

Electrical data

Consumption	1.04 W
Performance	6.73 lm/W
Ripple	3
Power Factor	0.96

Luminaire Output

Luminous Flux	7 lm
CRI CCT	927

Light distribution

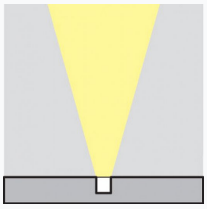

Safety characteristics

IK	05
IP	67

Temperature Operating Conditions

Lifetime	>50.000h L80B10