FAMA STEPS 2

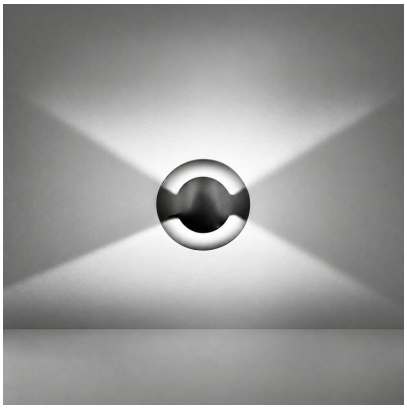

Technical drawings

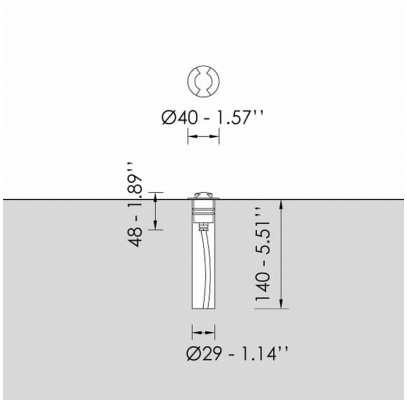

Product Details

CE LM80 Source Type H.P. LED

General Information

Housing	Brass
Product code	GR0213CL109DA
Product family	FAMA
Diffuser	Safety Glass Clear
Control Gear	Remote Electronic Driver
Options for Dimming Control	DALI2
Height	48 mm
Diameter	40 mm

Electrical data

Consumption	1.04 W
Performance	7.69 lm/W
Ripple	3
Power Factor	0.96

Luminaire Output

Luminous Flux	8 lm
CRI CCT	930

Light distribution

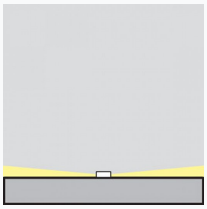

Safety characteristics

IK	07
IP	67

Temperature Operating Conditions

Lifetime	>50.000h L80B10