FERUS 80



Technical drawings

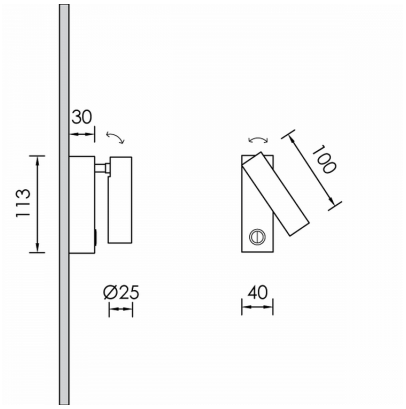

Product Details

CE

Source Type H.P. LED

General Information

Housing	Steel, Aluminium
Product code	DER0404CL004DAC
Product family	FERUS
Control Gear	Built-in ECG
Options for Dimming Control	DALI2
Options for Wireless Dimming	Casambi
Height	100 mm
Diameter	25 mm

Electrical data

Consumption	4 W
Performance	57.25 lm/W
Nominal Voltage	230 V

Luminaire Output

Beam Type	M
Beam	25º
Luminous Flux	229 lm
CRI CCT	930

Light distribution

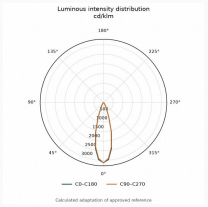

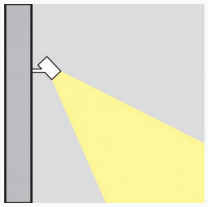

Safety characteristics

IK	05
IP	20

Temperature Operating Conditions