FERUS 80



Technical drawings

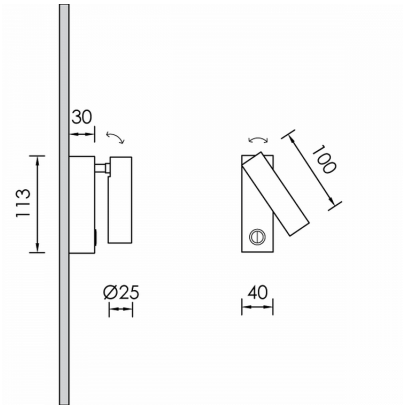

Product Details

CE

Source Type H.P. LED

General Information

Housing	Steel, Aluminium
Product code	DER0408CL001ON
Product family	FERUS
Control Gear	Built-in ECG
Options for Dimming Control	On-Off
Height	100 mm
Diameter	25 mm

Electrical data

Consumption	4 W
Performance	62.25 lm/W
Nominal Voltage	230 V

Luminaire Output

Beam Type	W
Beam	45º
Luminous Flux	249 lm
CRI CCT	940

Light distribution

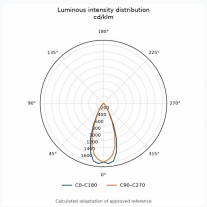

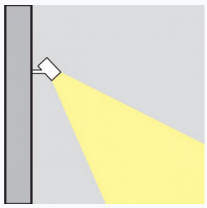

Safety characteristics

IK	05
IP	20

Temperature Operating Conditions