# FERUS 80



## Technical drawings

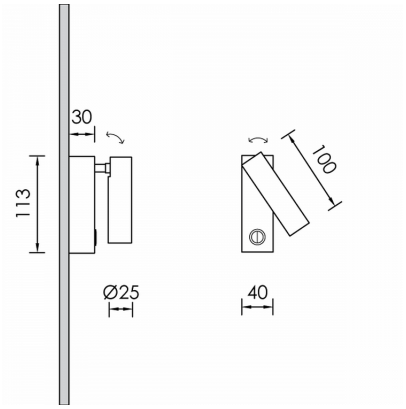


## Product Details

CE

Source Type H.P. LED

### General Information

| | |
|---|---|
| Housing | Steel, Aluminium |
| Product code | DER0408CL004ON |
| Product family | FERUS |
| Control Gear | Built-in ECG |
| Options for Dimming Control | On-Off |
| Height | 100 mm |
| Diameter | 25 mm |

### Electrical data

| | |
|---|---|
| Consumption | 4 W |
| Performance | 62.25 lm/W |
| Nominal Voltage | 230 V |

### Luminaire Output

| | |
|---|---|
| Beam Type | W |
| Beam | 45º |
| Luminous Flux | 249 lm |
| CRI CCT | 940 |

### Light distribution

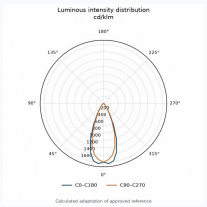


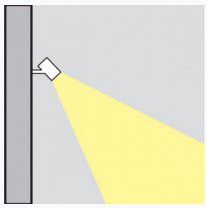

### Safety characteristics

| | |
|---|---|
| IK | 05 |
| IP | 20 |

### Temperature Operating Conditions