HEADOFFICE: Showroom 13 Sofokli Venizelou Ave., Likovrisi, P.O. Box 14123, Athens, Greece Tel: (+30) 210 2851 304 I www.bright.gr I info@bright.gr

FERUS 90



Technical drawings

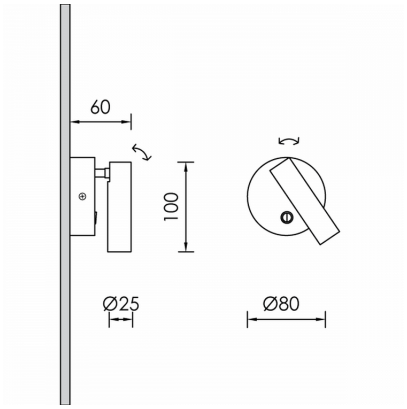

Product Details

CE

Source Type H.P. LED

General Information

Housing	Metal
Product code	DER0416CL001DAC
Product family	FERUS
Control Gear	Built-in ECG
Options for Dimming Control	DALI2
Options for Wireless Dimming	Casambi
Height	100 mm
Diameter	25 mm

Electrical data

Consumption	4 W
Performance	52.75 lm/W
Nominal Voltage	230 V

Luminaire Output

Beam Type	M
Beam	25º
Luminous Flux	211 lm
CRI CCT	940

Light distribution

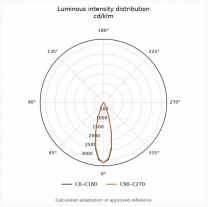

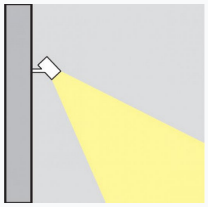

Safety characteristics

IK	05
IP	20

Temperature Operating Conditions