MACTO NOXA SMALL



Technical drawings

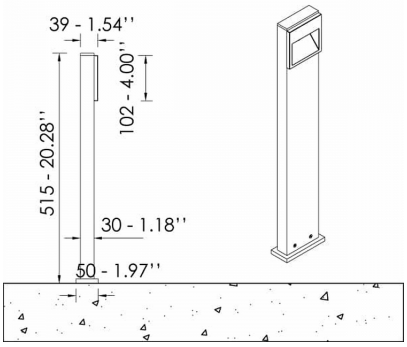

Product Details

CE LM80 LM79 TM21 REACH Source Type H.P. LED

General Information

Housing	Aluminium
Product code	BO0224CL009ON
Product family	MACTO
Diffuser	Opal Polycarbonate
Control Gear	Built-in ECG
Options for Dimming Control	On-Off
Width	39 mm
Length	50 mm
Height	515 mm

Electrical data

Consumption	1.1 W
Performance	111.82 lm/W
Ripple	3

Luminaire Output

Beam Type	ASY
Luminous Flux	123 lm
CRI CCT	940

Light distribution

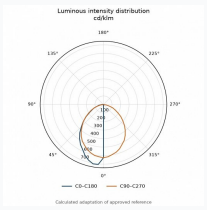

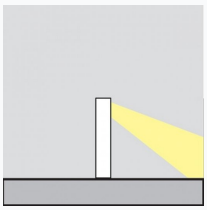

Safety characteristics

IK	04
IP	54

Temperature Operating Conditions

Lifetime	>50.000h L80B10