MINI TERES 1 BRASS DZ + TR + NAIL



Technical drawings

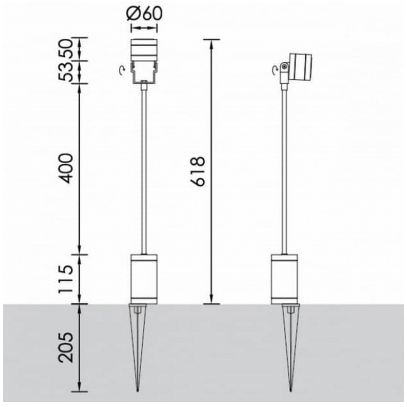

Product Details

CE LM80 Source Type H.P. LED

General Information

Housing	Brass
Product code	BO0227CL003ON
Product family	TERES
Diffuser	Safety Glass Clear
Control Gear	Remote Electronic Driver
Options for Dimming Control	On-Off
Height	50 mm
Diameter	60 mm

Electrical data

Consumption	1.12 W
Performance	100.89 lm/W
Ripple	3
Power Factor	0.96

Luminaire Output

Beam Type	M
Beam	25º
Luminous Flux	113 lm
CRI CCT	927

Light distribution

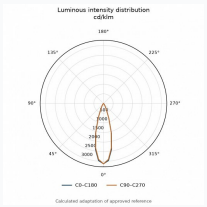

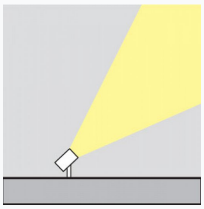

Safety characteristics

IK	08
IP	65

Temperature Operating Conditions

Lifetime	>50.000h L80B10 Module 3x H.P.LED CRI80 Ripple <3%