MINI TERES 1 GROUND BRASS H.P.LED



Technical drawings

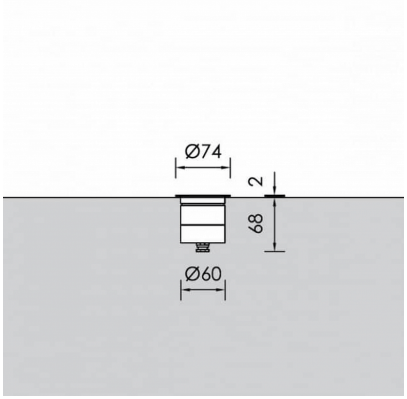

Product Details

CE LM80 Source Type H.P. LED

General Information

Housing	Brass
Product code	GR0303CL002DAC
Product family	TERES
Diffuser	Safety Glass Clear
Control Gear	Remote Electronic Driver
Options for Dimming Control	DALI2
Options for Wireless Dimming	Casambi
Height	70 mm
Diameter	74 mm

Electrical data

Consumption	3.36 W
Performance	100.6 lm/W
Ripple	3
Power Factor	0.96

Luminaire Output

Beam Type	M
Beam	25º
Luminous Flux	338 lm
CRI CCT	927

Light distribution

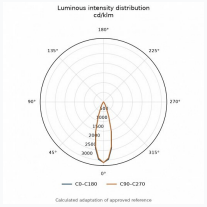

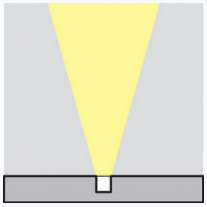

Safety characteristics

IK	07
IP	67

Temperature Operating Conditions

Lifetime	>50.000h L80B10