MINI TERES 1 SPOT BRASS TR H.P.LED



Technical drawings

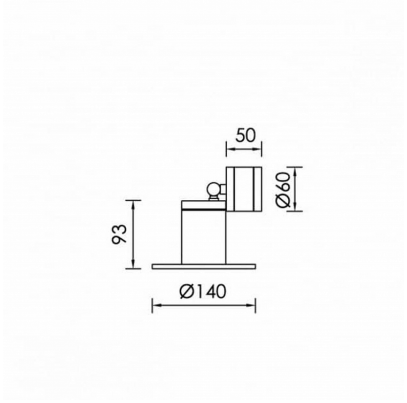

Product Details

CE LM80 Source Type H.P. LED

General Information

Housing	Brass
Product code	BO0262CL002DAC
Product family	TERES
Diffuser	Safety Glass Clear
Control Gear	Built-in ECG
Options for Dimming Control	DALI2
Options for Wireless Dimming	Casambi

Electrical data

Consumption	3.36 W
Performance	100.6 lm/W
Power Factor	0.96

Luminaire Output

Beam Type	UN
Beam	8º
Luminous Flux	338 lm
CRI CCT	927

Light distribution

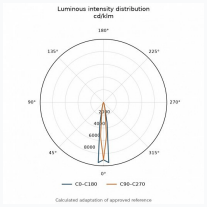

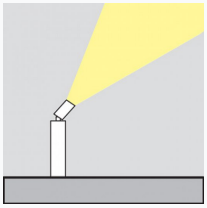

Safety characteristics

IK	07
IP	65

Temperature Operating Conditions