MINI VARIUS 2 BRASS H.P.LED



Technical drawings

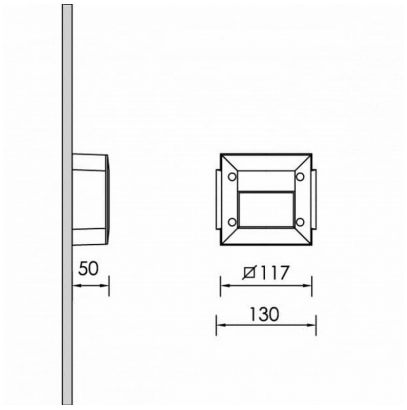

Product Details

CE

Source Type H.P. LED

General Information

Housing	Brass
Product code	WF0259CL109ON
Product family	VARIUS
Diffuser	Safety Glass Clear
Control Gear	Built-in ECG
Options for Dimming Control	On-Off
Width	130 mm
Length	130 mm
Height	50 mm

Electrical data

Consumption	1.04 W
Performance	31.73 lm/W
Power Factor	0.96

Luminaire Output

Luminous Flux	33 lm
CRI CCT	940

Light distribution

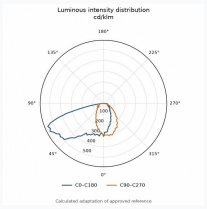

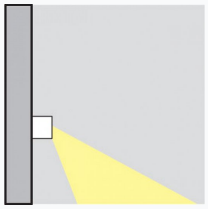

Safety characteristics

IK	05
IP	65

Temperature Operating Conditions