NEPA GROUND OUT BRASS LED



Technical drawings

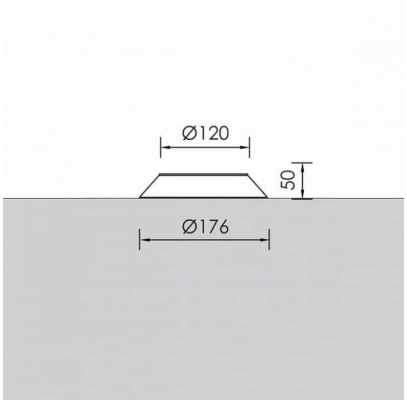

Product Details

CE

Source Type H.P. LED

General Information

Housing	Brass
Product code	GR0332CL001DA
Product family	NEPA
Diffuser	Sandblasted safety glass
Control Gear	Built-in ECG
Options for Dimming Control	DALI2
Height	50 mm
Diameter	176 mm

Electrical data

Consumption	1.12 W
Performance	100.89 lm/W
Power Factor	0.96

Luminaire Output

Beam Type	UN
Beam	8º
Luminous Flux	113 lm
CRI CCT	927

Light distribution

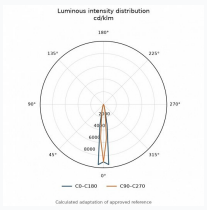

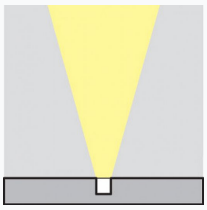

Safety characteristics

IK	10
IP	67

Temperature Operating Conditions