HEADOFFICE: Showroom 13 Sofokli Venizelou Ave., Likovrisi, P.O. Box 14123, Athens, Greece Tel: (+30) 210 2851 304 I www.bright.gr I info@bright.gr

NEPA GROUND OUT BRASS LED



Technical drawings

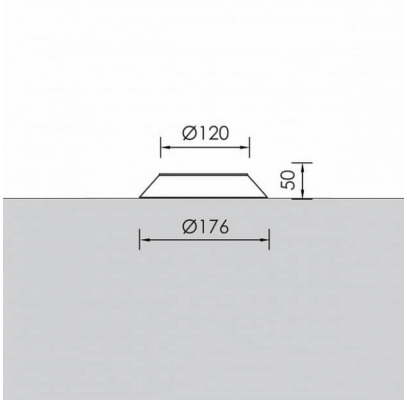

Product Details

CE

Source Type H.P. LED

General Information

Housing	Aluminium
Product code	GR0340CL003DA
Product family	NEPA
Diffuser	Sandblasted safety glass
Control Gear	Built-in ECG
Options for Dimming Control	DALI2
Height	50 mm
Diameter	176 mm

Electrical data

Consumption	1.12 W
Performance	116.07 lm/W
Power Factor	0.96

Luminaire Output

Beam Type	W
Beam	45º
Luminous Flux	130 lm
CRI CCT	940

Light distribution

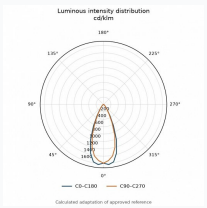

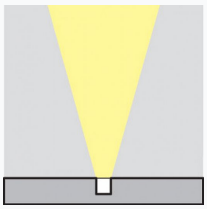

Safety characteristics

IK	10
IP	67

Temperature Operating Conditions