NEPA OUTDOOR LED



Technical drawings

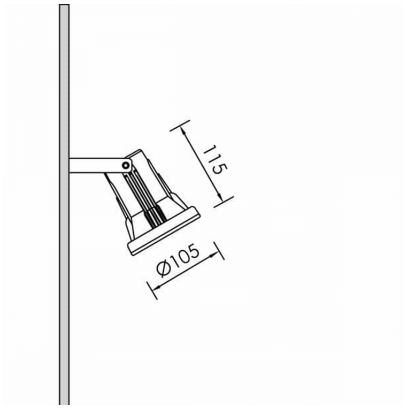

Product Details

CE LM80 Source Type H.P. LED

General Information

Housing	Aluminium
Product code	PJ0387CL009DAC
Product family	NEPA
Diffuser	Clear / Sandblasted safety glass
Control Gear	Built-in ECG
Options for Dimming Control	DALI2
Options for Wireless Dimming	Casambi
Height	115 mm
Diameter	105 mm

Electrical data

Consumption	3.36 W
Performance	100.6 lm/W
Ripple	3
Power Factor	0.96

Luminaire Output

Beam Type	W
Beam	45º
Luminous Flux	338 lm
CRI CCT	927

Light distribution

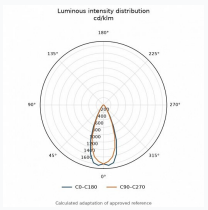

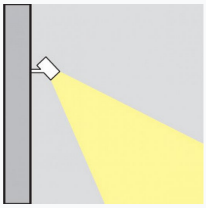

Safety characteristics

IK	08
IP	65

Temperature Operating Conditions

Lifetime	>50.000h L80B10 PAR16 / GU10 / 230V