NEPA STEPS OUT LED BRASS



Technical drawings

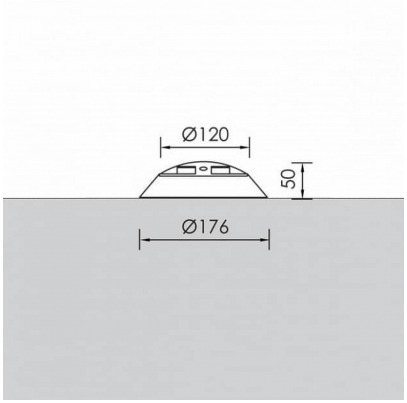

Product Details

CE

Source Type H.P. LED

General Information

Housing	Brass
Product code	GR0351CL009ON
Product family	NEPA
Diffuser	Sandblasted safety glass
Control Gear	Built-in ECG
Options for Dimming Control	On-Off
Height	50 mm
Diameter	176 mm

Electrical data

Consumption	1.04 W
Performance	7.69 lm/W
Power Factor	0.96

Luminaire Output

Luminous Flux	8 lm
CRI CCT	930

Light distribution

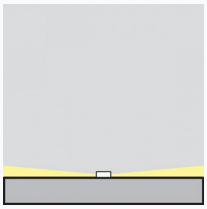

Safety characteristics

IK	10
IP	67

Temperature Operating Conditions